FlexiSpot

Q3G

Glass All-in-One Standing Desk



FlexiSpot

Choose FlexiSpot Q3G

Versatile, cost-effective standing desks for a better working day.
Available on request in Kenya, with pay on delivery.



flexispot.ke · WhatsApp/Call +254 794 067 466 · hello@flexispot.ke

FlexiSpot



Height Adjustments
735-1180mm

Lifting speed
20mm/s

Noise
< 50dB

Load capacity
45kg

FlexiSpot

All-in-One Multifunctional Design

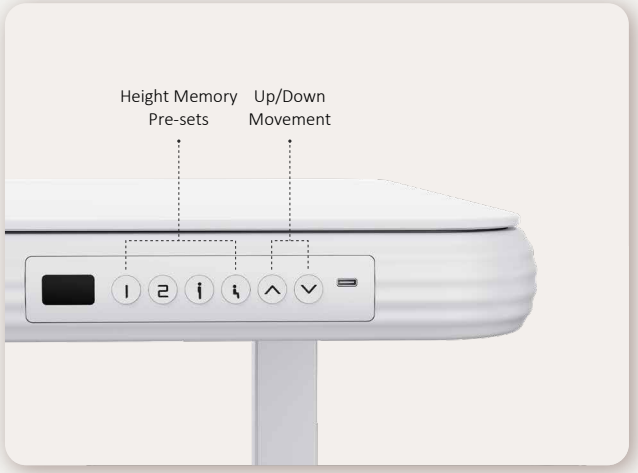

4 Programmable Height Presets

The transition between sitting and standing easily and smoothly with just a single touch of a button.



USB Charging Port

A Type-C port (5V/3A) for charging your phone and other electronic devices.



Embedded Drawer

Provides seamlessly integrated storage space for your home office supplies.

FlexiSpot

Tempered Glass for a Safer Sleeker Workspace

Superior quality and stringent testing standards ensure the safe use of glass surfaces

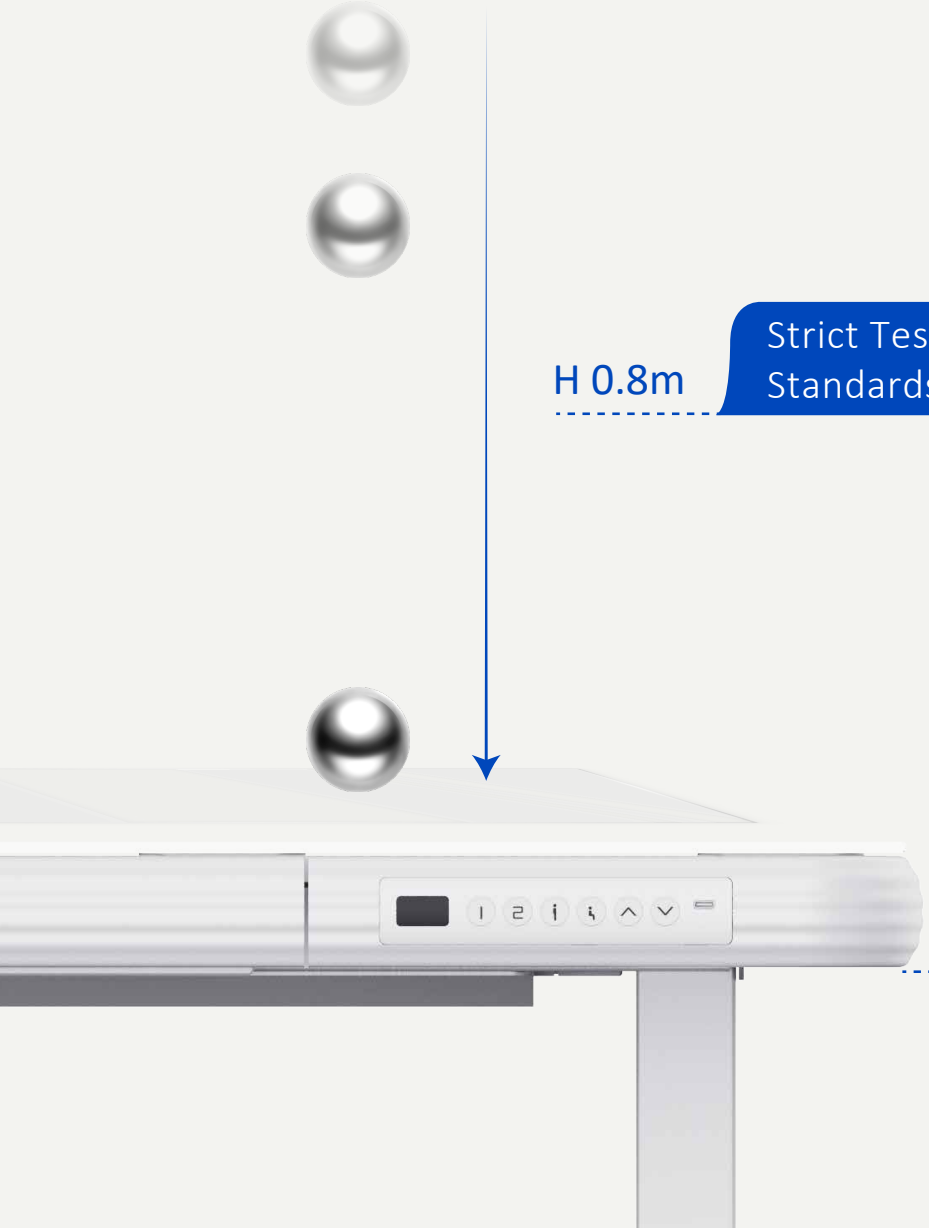



Protection in Extreme Situations

FlexiSpot

SPECIFICATIONS

Height	Capacity	Frame Color
735 - 1180mm	45kg	White

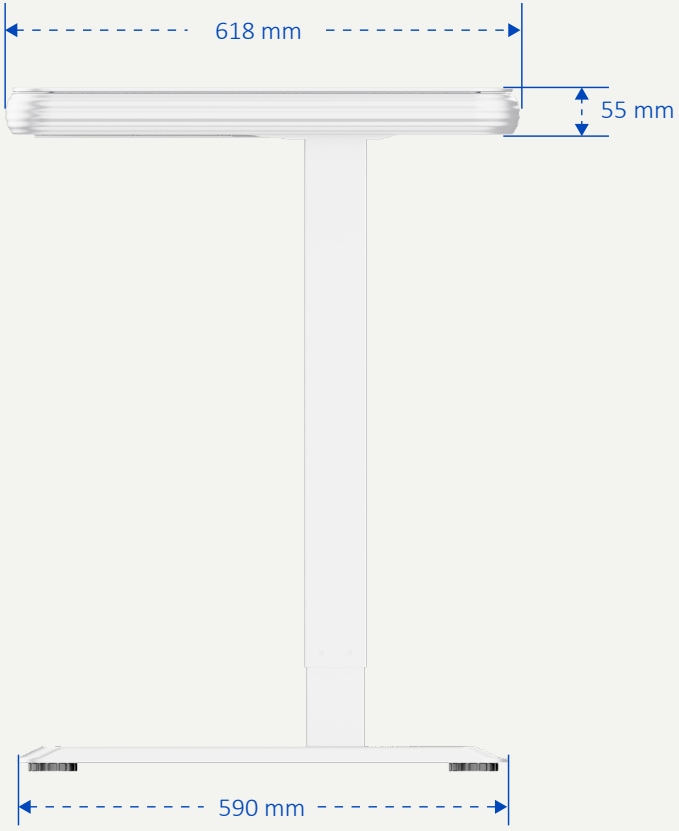

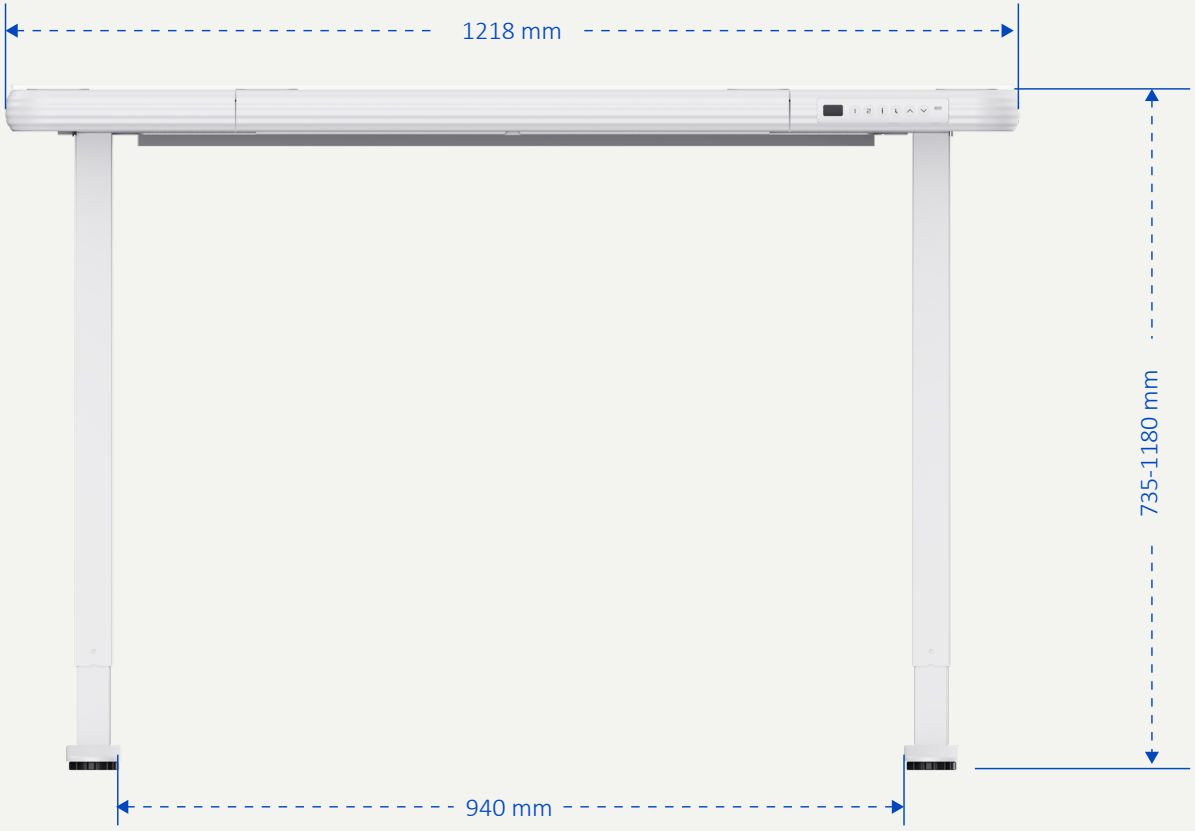

FlexiSpot Q3G

Glass all-in-one standing desk · desktop included

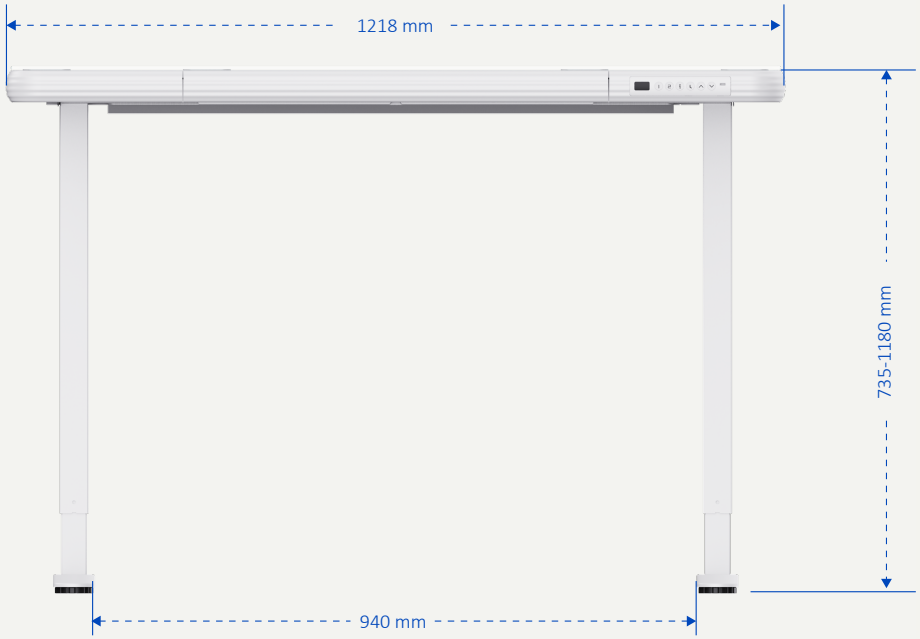

SPECIFICATIONS

Desktop	**Tempered glass, 1218 × 618 × 55 mm**
Height range	**735–1180 mm**
Lifting speed	**20 mm/s**
Max load capacity	**45 kg**
Noise level	**<50 dB**
Controls	**4 programmable height presets**
Built in	**Drawer and USB-C port (5 V / 3 A)**
Power	**100–240 V**
Base (feet)	**940 × 590 mm**
Colours	**White (black coming soon)**
Supplied as	**Complete desk with glass top**

Specifications from FlexiSpot. Ask us to confirm before you order.

FlexiSpot

New Working & New Living

CONTACT US

flexispot.ke

WhatsApp or call +254 794 067 466

hello@flexispot.ke

PAY ON DELIVERY ACROSS KENYA